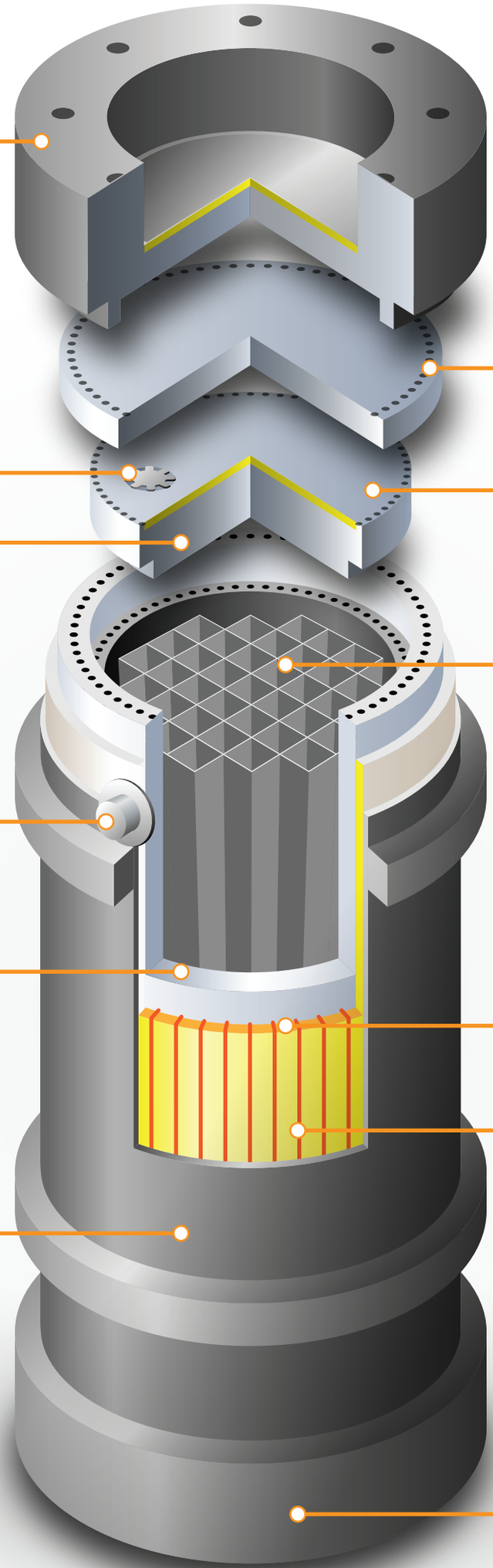

Energy Encyclopedia.com